Lodam
BY BITZER GROUP

Lodam Heat Pump Controller

User manual

Version 5.0.

LMC320

Contents

1. Read this first 4
    1.1. Installation 4
    1.2. Safety 4
2. General 5
3. Definitions 5
4. Mounting of LMC320 controller and LUP200 6
    4.1. LMC320 6
    4.2. LUP200 6
    4.3. Panel cut out for the LUP200 6
5. Technical data 7
6. Connections 9
    6.1. Connections on the LMC320 9
    6.2. Connection between LMC320 and LUP200 10
    6.3. Connections on the LUP200 10
7. Menu system on the LMC320 11
    7.1. Use the display and the menu system 11
    7.2. Main menu 11
    7.3. Password menu 11
8. Examples of application use 12
    8.1. Type 1: Ground to water, heating tank on heating system 12
    8.2. Type 2: Ground to water heat pump 12
    8.3. Type 3: Ground to water, solar panel, heating tank on heating system 12
    8.4. Type 4: Ground to water, solar panel 13
    8.5. Type 5: Air to water, heating tank on heating system 13
    8.6. Type 6: Air to water heat pump 13
    8.7. Type 7: Air to water, solar panel, heating tank on heating system 13
    8.8. Type 8: Air to water, solar panel 14
    8.9. Type 9: Ground to water, dual condenser 14

8.10. Type 10: Ground to water, dual condenser, heating tank on heating system 14
8.11. Type 11: Ground to water, dual condenser, solar panel 14
8.12. Type 12: Ground to water, dual condenser, solar panel, heating tank on heating system 15
8.13. Type 13: Air to water, dual condenser 15
8.14. Type 14: Air to water, dual condenser, heating tank on heating system 15
8.15. Type 15: Air to water, dual condenser, solar panel 15
8.16. Type 16: Air to water, dual condenser, solar panel, heating tank on heating system 16
8.17. Type 6: Air to water heatpump, dual compressor 16
8.18. Type 6: Air to water heatpumps, cascade connection (master - slave) 16
9. FAQ 17
10. Alarm system and trouble shooting 18
11. Accessories 21
12. Ambient compensation curves 22
13. NTC temperature/resistance table 23
14. Index 24
15. Notes 25

1. Read this first

The contents of this manual are subject to change without notice. Lodam electronics holds the copyright to this user's manual. The user shall follow any instructions given in this user manual entirely and not only partly. Any non-following of this user manual result in exclusion of all warranties, guarantees, and liabilities. Copyright© 2014 by Lodam electronics a/s. All Rights Reserved.

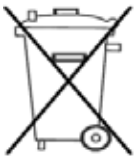

Disposing of the parts of the controller:

INFORMATION FOR USERS ON THE CORRECT HANDLING OF WASTE ELECTRICAL AND ELECTRONIC EQUIPMENT (WEEE)

In reference to European Union directive 2002/96/EC issued on 27 January 2003 and the related national legislation, please note that:

1. WEEE cannot be disposed of as municipal waste and such waste must be collected and disposed of separately;
2. The public or private waste collection systems defined by local legislation must be used. In addition, the equipment can be returned to the distributor at the end of its working life when buying new equipment;
3. The equipment may contain hazardous substances: the improper use or incorrect disposal of such may have negative effects on human health and on the environment;
4. The symbol (crossed-out wheeled bin) shown on the product or on the packaging and on the instruction sheet indicates that the equipment has been introduced onto the market after 13 August 2005 and that it must be disposed of separately;
5. In the event of illegal disposal of electrical and electronic waste, the penalties are specified by local waste disposal legislation.

1.1. Installation

Before installation the user should be thoroughly familiarized with this user manual, especially with purposes, installation, settings and operation.

Special care should be taken when installing and connecting external equipment (sensor, high voltage etc) and handling the PCB's correctly according to protection against ESD.

Installation of the LMC320 must be performed by authorized personnel only. All warranties are excluded in case installation is performed by unauthorized personnel or in case the LMC320 has not been correctly installed.

Electrical plant failures are to be immediately solved, even though no immediate danger exists; the LMC320 must not be operating.

1.2. Safety

The LMC320 is not a safety component and cannot be used in "medical" or "life support" equipment.

The LMC320 is not a safety component according to the Machinery Directive.

Before plant commissioning the service technician shall ensure that personal safety requirements are met in conformity with the Machinery Directive on the basis of safety estimations.

2. General

Lodam's Heat Pump Controller, LMC320 enable you to gain total control of domestic hot water and heating for domestic comfort – thereby optimizing your system to save time, money and energy.

Our Lodam Heat Pump Controller is designed for most heat pump applications.

The LMC320 Lodam Heat Pump controller can be used in most heat pump applications to obtain highest possible COP.

- Ground - Brine / Water Heat Pumps
- Air / Water Heat Pumps
- Water / Water Heat Pumps
- Domestic Hot tap water Heat Pumps
- Hot tap water Heat Pump with attached solar panel
- House heating with Heat Pump and optional supply heat
- Active or passive cooling

Some benefits from the LMC320 Heat Pump Controller

- Energy and cost saving through intelligent capacity control via frequency inverter
- Higher maximum capacity of compressors using frequency inverter
- Intelligent Defrost Scheduling – Saves energy and ensures low capacity waste
- Intelligent Winter/Summer and Ambient temperature compensation – Provides comfort and saves energy.
- Use of a solar panel for Domestic Hot Tap Water
- Air or Ground source
- User friendly
- Heat pumps can be cascade coupled for increased capacity
- Two compressors
- Concrete hardening sequence

This user manual applies to LMC320 software version 2.1.0.0 or higher.

3. Definitions

Definitions	
ESD	Electro Static Discharge
COP	Coefficient Of Performance
FI	Frequency inverter
I/O	Input / Output (electrical signals in and out of a unit).
LMT	Lodam Multi Tool (PC communication tool for Lodam's controllers).
NC	Normally Closed (relay)
NO	Normally Open (relay)
RS485	Serial communication interface.

There are four LMC320 Heat pump controller kit configurations

- Basic configuration:
  - 1 Lodam Heat Pump controller (LMC320)
  - 1 Lodam full graphical colour display (LUP200)
  - 1 Cabinet and foil keyboard for LUP200

- Basic configuration + additional IO for use with solar panels etc.
  - 1 Basic configuration
  - 1 Option module for extra I/O (LOM309)
  - 1 Connector kit for LMC320 + LOM309

- Basic configuration + web server functionality
  - 1 Basic configuration
  - 1 Option Ethernet Module (LOM320)
  - 1 Access license to Lodam Multi Tool

- Full configuration with extra IO and web server functionality
  - 1 Basic configuration
  - 1 Option module for extra I/O (LOM309)
  - 1 Connector kit for LMC320 + LOM309
  - 1 Option Ethernet Module (LOM320)
  - 1 Access license to Lodam Multi Tool

4. Mounting of LMC320 controller and LUP200

4.1. LMC320

All dimensions are in mm.

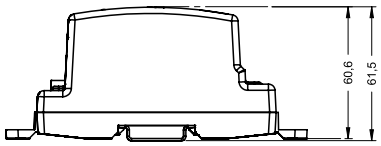

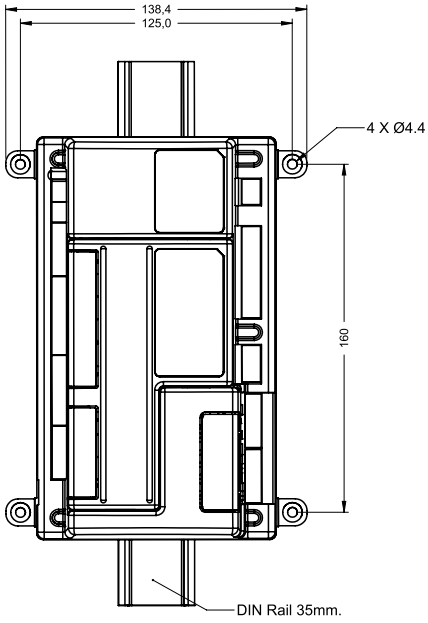

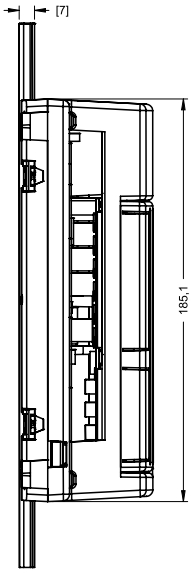

4.2. LUP200

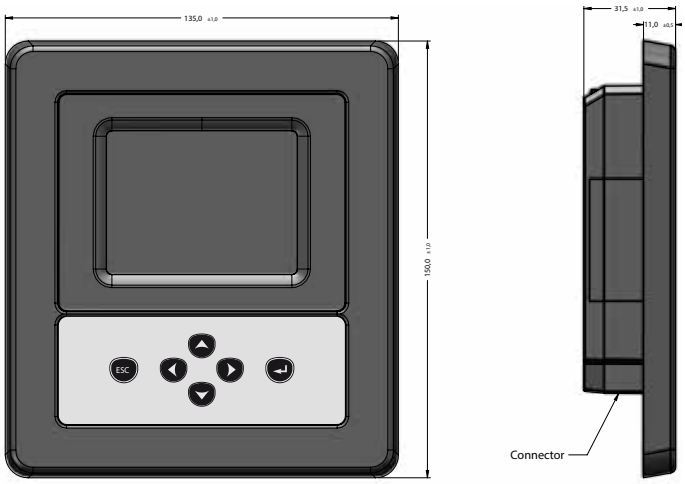

4.3. Panel cut out for the LUP200

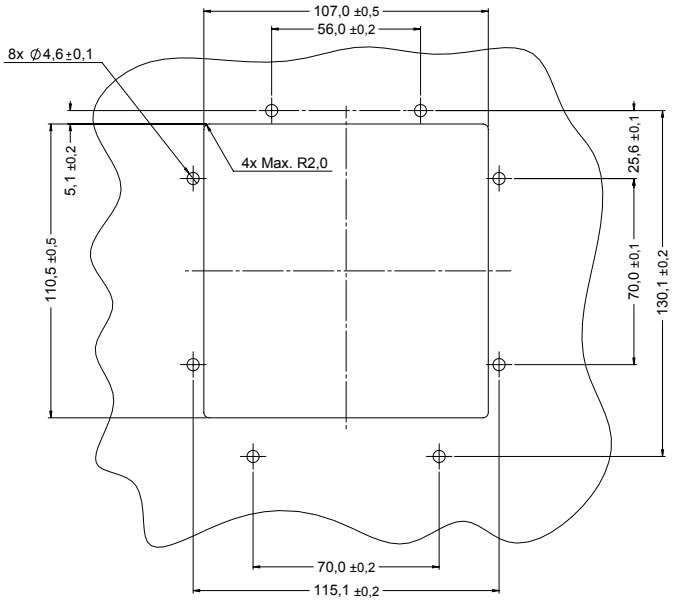

5. Technical data

Technical specifications, LMC320 Heat pump controller	
Size	185mm (l) * 110mm (w) * 61mm (h)
Power supply	240VAC 50-60 HZ ±10%; typical 4 VA, max. 15 VA
CPU	LMC320 - ARM7 processor; Web versions: Ethernet connection - ARM9
Operating temperature	-20°C ~ +60°C
Storage temperature	-30°C ~ +60°C
Enclosure protection	IP20, pollution degree 2
Relative humidity	5% - 95%RH, non-condensing
Temperature inputs	11 for Lodam NTC sensors -40°C ~ +99°C;+/- 1°C accuracy
Analogue inputs	2, AI1 to AI2; 0-5V with 5 Volt supply for radiometric pressure transmitters; Rin: 25KΩ. Not used on the LMC320
Digital inputs, Basic	4, not galvanically isolated; 0 - 3.3V with pull-up resistor
Digital inputs, Extended (as Basic + 4 more)	4, not galvanically isolated; 0 – 3.3V with pull-up resistor
Analogue outputs	3, AO0 to AO2; 0-10V, +/- 3%, Rin > 10kOhm; max frequency 1Hz
Relay outputs, Basic	5; RE1 to RE5: 10A 24VDC / 10A 250VAC; max 250VAC isolation between relays. RE5 is a toggle relay; max isolation 400VAC between relays.
Relay outputs, Extended (as Basic + 5 more relays)	RE6 to RE11: 10A 24VDC / 10A 250VAC resistive, max 3A inductive load; double isolation to low power side; max. 250VAC isolation between relays. RE6 must be enabled by a wire jumper in TF1
RS485 ports	2 with common 12V 100mA output; 1 used for display and 1 used for FI 1 with optional 120 Ω termination resistor on Extended versions
USB ports	1 slave mode only for software update and communication with a PC 2 USB host A connector for software update and future use on Extended versions
Real time clock	With 1 year battery back up
Datalog	1 year capacity
12VDC output	Up to 500 mA
Ethernet connection	1, 10/100 Mbit; on Web versions

Technical specifications, LUP200:	
Display	262k colors, graphical display 320x240 pixels
Cabinet dimensions	135 mm (h) * 150mm (w) * 25mm (d)
Power supply	12 VDC
CPU	ARM7 processor
Operating temperature	-20˚C ~ + 60ºC
Storage temperature	-30ºC ~ + 60ºC
RAM	16 MB
RS485 ports	1 port
USB port	1 mini B connector (device mode only); for future use
Display backlight lifetime	30,000 hours at 20ºC and “normal” brightness
Number of buttons	6 buttons
Languages	Ready for multiple languages & “special” characters
Enclosure protection	Front: IP 66 when mounted accordingly in cabinet1 Other: IP 00
Cabinet mounting	8 pcs. 4 mm screws Max screw-in depth 6 mm Max tightening torque 3 Nm

Note 1: Front is IP 66 if the LUP200 is mounted with the supplied gasket in a metal sheet cabinet of at least 1,5mm thickness and level accuracy better than 0.1 mm over the entire mounting area.

Note 2: Maximum cable length between the LMC320 and the LUP200 is 100 m.

6. Connections

6.1. Connections on the LMC320

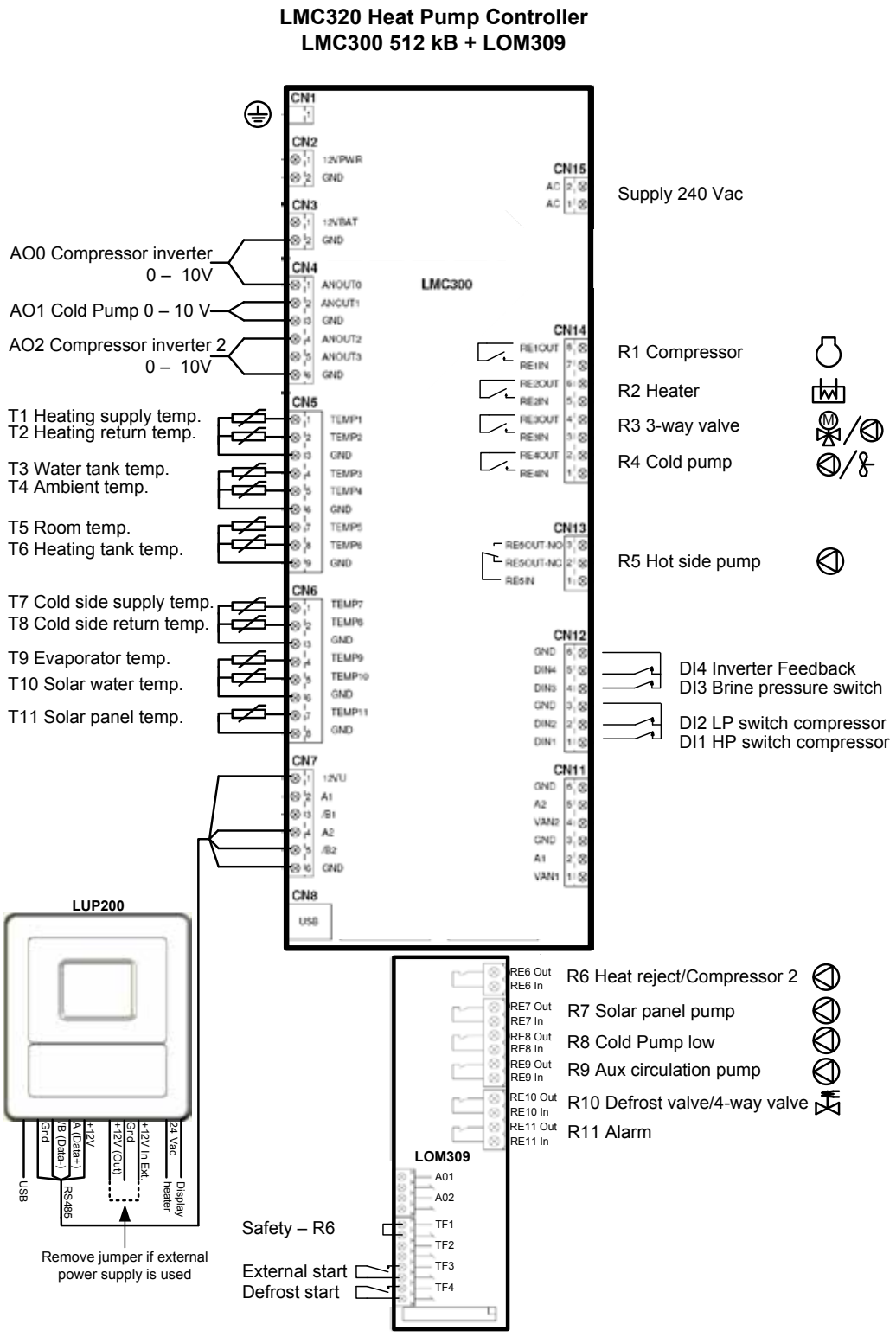

6.2. Connection between LMC320 and LUP200

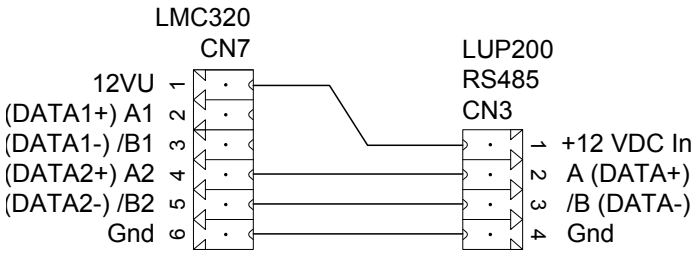

6.3. Connections on the LUP200

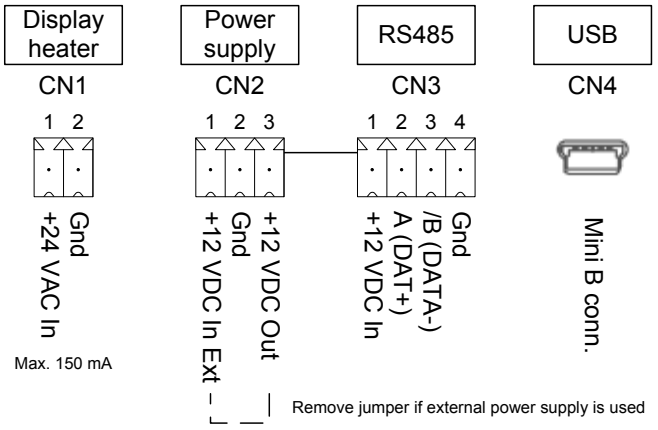

7. Menu system on the LMC320

The menu system is used to configure the LMC320 controller, adjust parameters or enable/disable functions of the LMC320. The alarm list is also shown here.

7.1. Use the display and the menu system

The buttons on the user panel have the following functions:

LUP200 buttons:		
Esc	Esc button	Cancel editing of a setting / Return to higher level menu
	Left arrow	Select icon to the left
	Right arrow	Select icon to the right
	Up arrow	Select menu item one step up / Increase value in editing mode. Holding the button down in editing mode will increase step speed.
	Down arrow	Select menu item one step down / Decrease value in editing mode Holding the button down in editing mode will increase step speed.
	Enter button	Open sub-menu under the icon or lines ending with a “>” / Start editing mode. The value on the line is shown with inverted colours.

7.2. Main menu

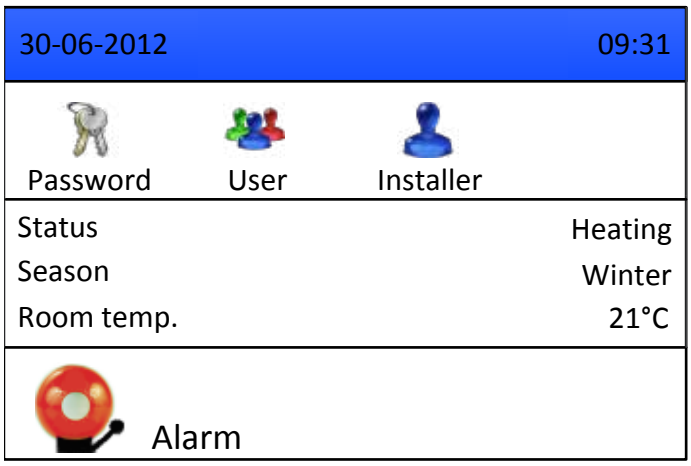

When the user – or installer password has been entered, the respective icon appears. By moving the cursor to the wanted icon and pressing Enter key, the submenus are shown.

Status shows the status of the heat pump. Seasonal status can be Summer or Winter. This affects the settings.

Room temperature shows the temperature at the room control sensor.

If the alarm icon is flashing, there is at least one active alarm which is active. If the alarm icon is steady, there is an inactive alarm which is not yet acknowledged.

7.3. Password menu

Enter the password for the desired user category.

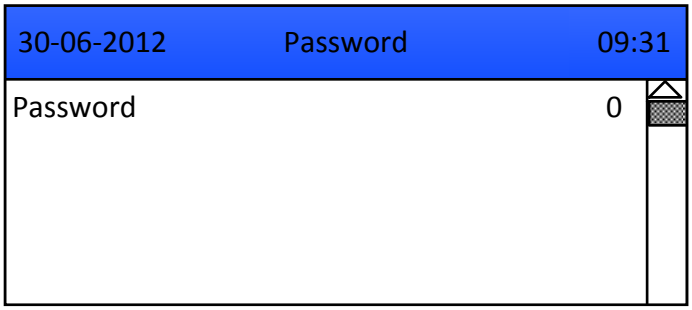

Default passwords:

User	1
Installer	2

8. Examples of application use

Legend for all examples is shown in section 6.1 Connections on the LMC300.

There is a description of the corresponding menu settings and whether the extended controller version (with Option Module LOM309) is needed.

8.1. Type 1: Ground to water, heating tank on heating system

- Heatpump – Control mode: “Heat tank On/Off” or “Heat tank Mod.”
- Hot water – Hot water source: “None”, “HP”, “EH” or “HP+EH”
- Defrost – Defrost method: “Off”
- Requires extended version

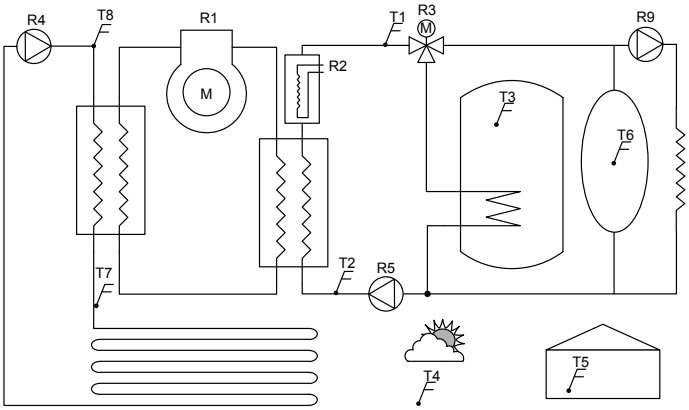

8.2. Type 2: Ground to water heat pump

- Heatpump – Control mode: “Ret On/Off” or “Sup Mod.”
- Hot water – Hot water source: “None”, “HP”, “EH” or “HP+EH”
- Defrost – Defrost method: “Off”

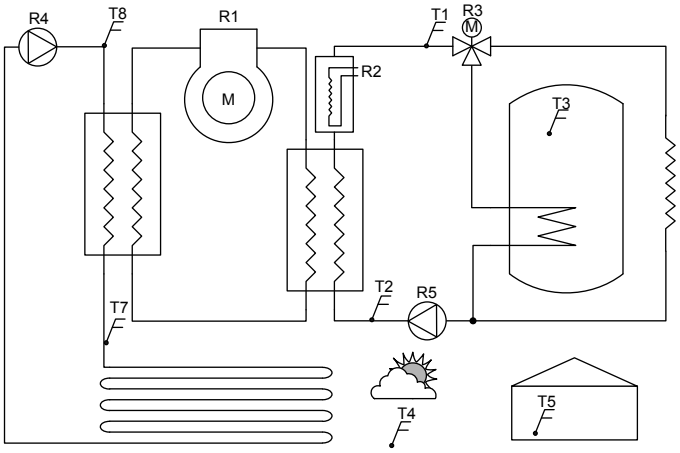

8.3. Type 3: Ground to water, solar panel, heating tank on heating system

- Heatpump – Control mode: “Heat tank On/Off” or “Heat tank Mod.”
- Hot water – Hot water source: “SP”, “HP+SP” or “HP+E-H+SP”
- Defrost – Defrost method: “Off”
- Requires extended version

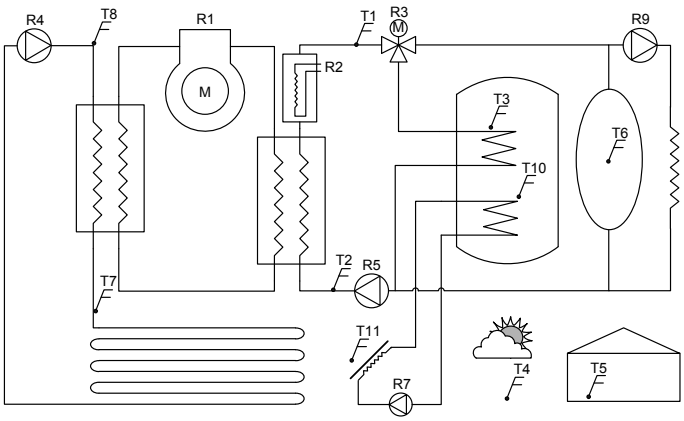

8.4. Type 4: Ground to water, solar panel

- Heatpump – Control mode: “Ret On/Off” or “Sup Mod.”
- Hot water – Hot water source: “SP”, “HP+SP” or “HP+E-H+SP”
- Defrost – Defrost method: “Off”
- Requires extended version

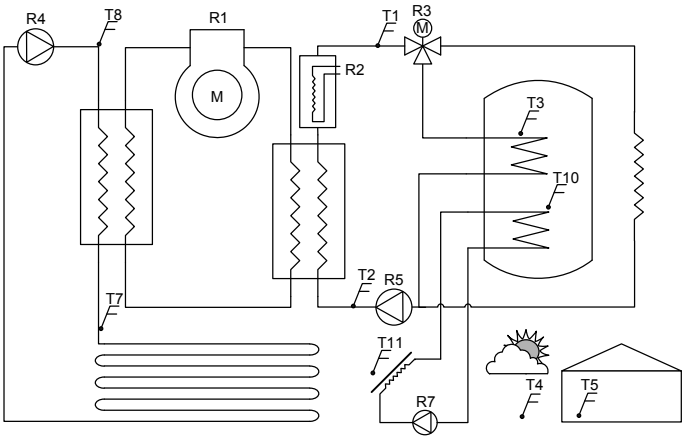

8.5. Type 5: Air to water, heating tank on heating system

- Heatpump – Control mode: “Heat tank On/Off” or “Heat tank Mod.”
- Hot water – Hot water source: “None”, “HP”, “EH” or “HP+EH”
- Defrost – Defrost method: “Air”, “HG” or “Auto”
- Requires extended version

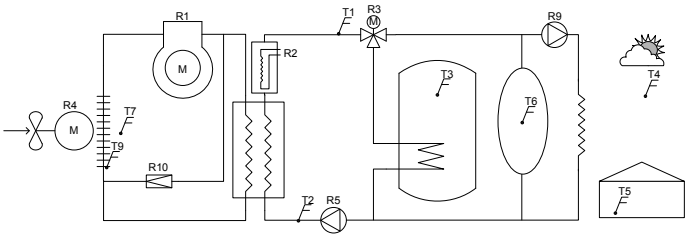

8.6. Type 6: Air to water heat pump

- Heatpump – Control mode: “Ret On/Off” or “Sup Mod.”
- • Hot water – Hot water source: “None”, “HP”, “EH” or “HP+EH”
- Defrost – Defrost method: “Air”, “HG” or “Auto”
- Requires extended version

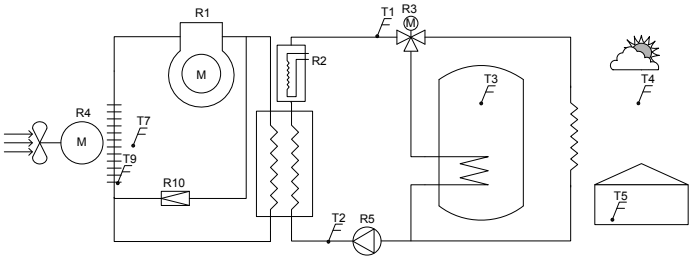

8.7. Type 7: Air to water, solar panel, heating tank on heating system

- Heatpump – Control mode: “Heat tank On/Off” or “Heat tank Mod.”
- Hot water – Hot water source: “SP”, “HP+SP” or “HP+E-H+SP”
- Defrost – Defrost method: “Air”, “HG” or “Auto”
- Requires extended version

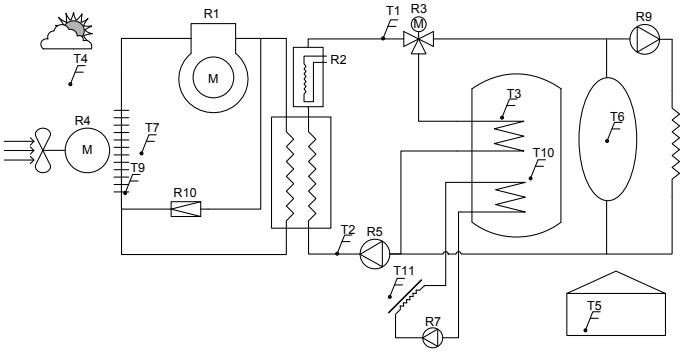

8.8. Type 8: Air to water, solar panel

- Heatpump – Control mode: “Ret On/Off” or “Sup Mod.”
- Hot water – Hot water source: “SP”, “HP+SP” or “HP+E-H+SP”
- Defrost – Defrost method: “Air”, “HG” or “Auto”
- Requires extended version

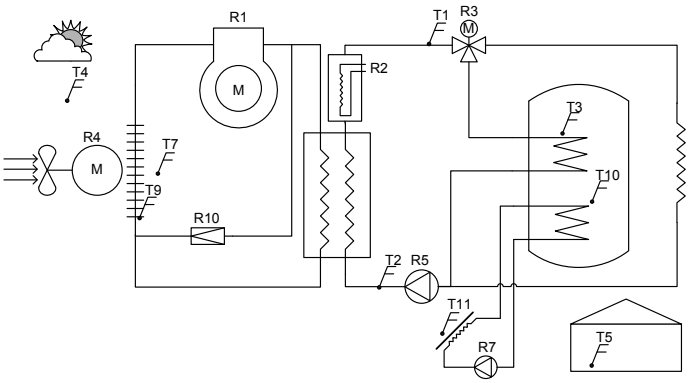

8.9. Type 9: Ground to water, dual condenser

- Heatpump – Control mode: “Ret On/Off” or “Sup Mod.”
- Hot water – Hot water source: “HP-Dual”
- Defrost – Defrost method: “Off”

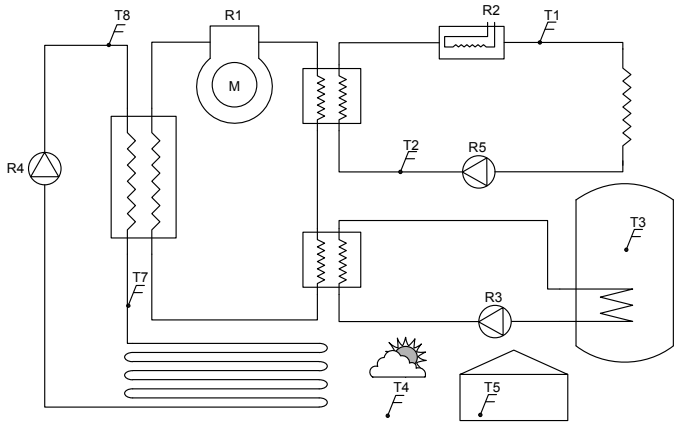

8.10. Type 10: Ground to water, dual condenser, heating tank on heating system

- Heatpump – Control mode: “Htank On/Off” or “Htank Mod.”
- Hot water – Hot water source: “HP-Dual”
- Defrost – Defrost method: “Off”
- Requires extended version

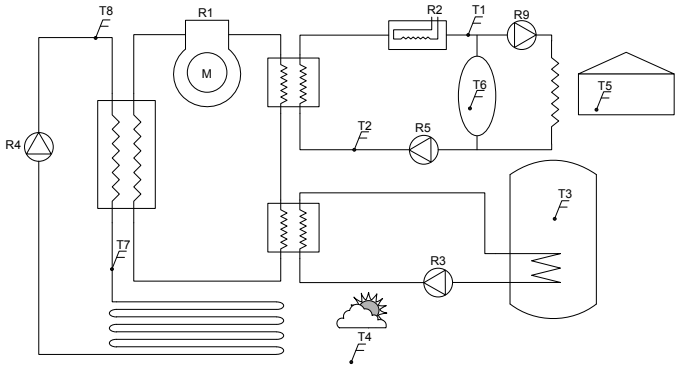

8.11. Type 11: Ground to water, dual condenser, solar panel

- Heatpump – Control mode: “Ret On/Off” or “Sup Mod.”
- Hot water – Hot water source: “HP-Dual+SP”
- Defrost – Defrost method: “Off”
- Requires extended version

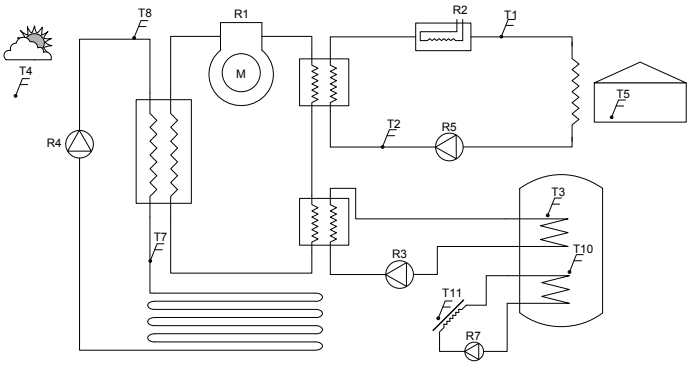

8.12. Type 12: Ground to water, dual condenser, solar panel, heating tank on heating system

- Heatpump – Control mode: “Htank On/Off” or “Htank Mod.”
- Hot water – Hot water source: “HP-Dual+SP”
- Defrost – Defrost method: “Off”
- Requires extended version

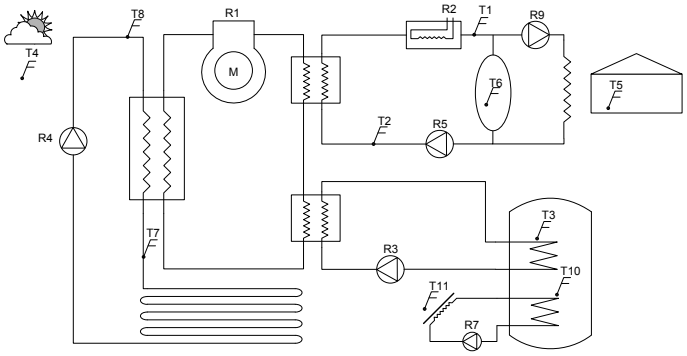

8.13. Type 13: Air to water, dual condenser

- Heatpump – Control mode: “Ret On/Off” or “Sup Mod.”
- Hot water – Hot water source: “HP-Dual”
- Defrost – Defrost method: “Air”, “HG” or “Auto”
- Requires extended version

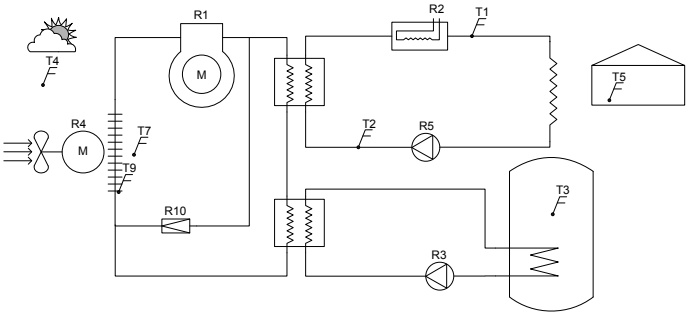

8.14. Type 14: Air to water, dual condenser, heating tank on heating system

- Heatpump – Control mode: “Htank On/Off” or “Htank Mod.”
- Hot water – Hot water source: “HP-Dual”
- Defrost – Defrost method: “Air”, “HG” or “Auto”
- Requires extended version

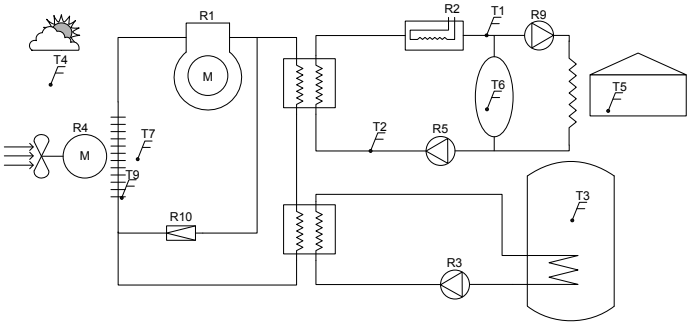

8.15. Type 15: Air to water, dual condenser, solar panel

- Heatpump – Control mode: “Ret On/Off” or “Sup Mod.”
- Hot water – Hot water source: “HP-Dual+SP”
- Defrost – Defrost method: “Air”, “HG” or “Auto”
- Requires extended version

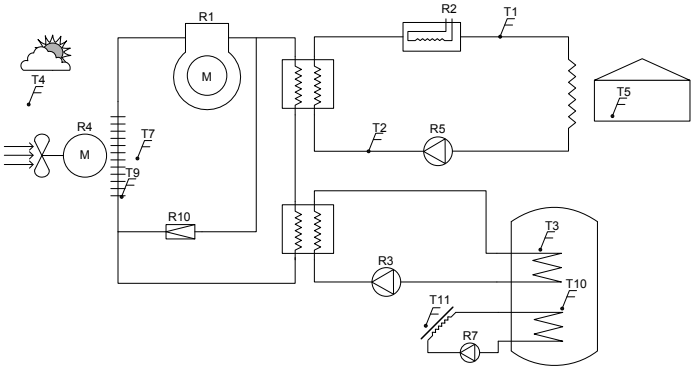

8.16. Type 16: Air to water, dual condenser, solar panel, heating tank on heating system

- Heatpump – Control mode: “Htank On/Off” or “Htank Mod.”
- Hot water – Hot water source: “HP-Dual-SP”
- Defrost – Defrost method: “Air”, “HG” or “Auto”
- Requires extended version

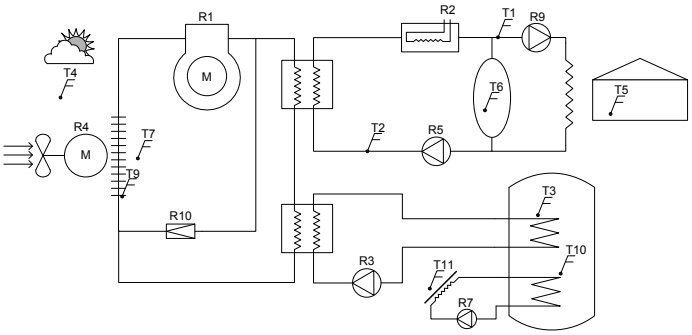

8.17. Type 6: Air to water heat-pump, dual compressor

- Heatpump - Compressor mode: “Dual ON/OFF”, “FC + ON/OFF”, “Dual FC”
- Heatpump - Control mode: “Sup Mod.”, “HTank Mod”
- Hot water – Hot water source: “None”, “HP”, “EH” or “HP+EH”
- Defrost - Defrost method: “Air”, “HG” or “Auto”
- Requires extended version

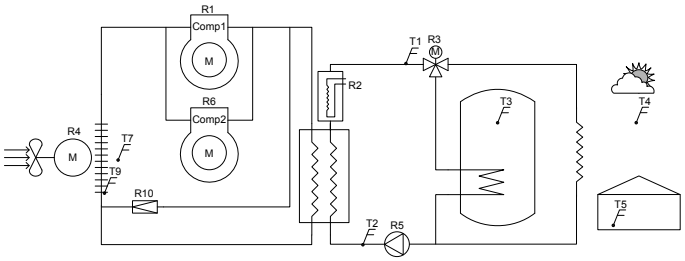

8.18. Type 6: Air to water heatpumps, cascade connection (master - slave)

- Heatpump - Compressor mode: “ON/OFF”, “FC”
- Heatpump - Control mode: “Sup Mod.”, “HTank Mod”, “Ret On/Off”, “HTank On/Off
- Heatpump - External Start: “Off” on master heat pump, “On” on slave heat pump
- Heatpump - Electrical heat delay: “15 min” on master heat pump
- Hot water – Hot water source: “None”, “HP”, “EH” or “HP+EH”
- Defrost - Defrost method: “Air”, “HG” or “Auto”
- User - Hot water set point: Slave = master Hot water set point - 0.5 ºC
- Requires extended version

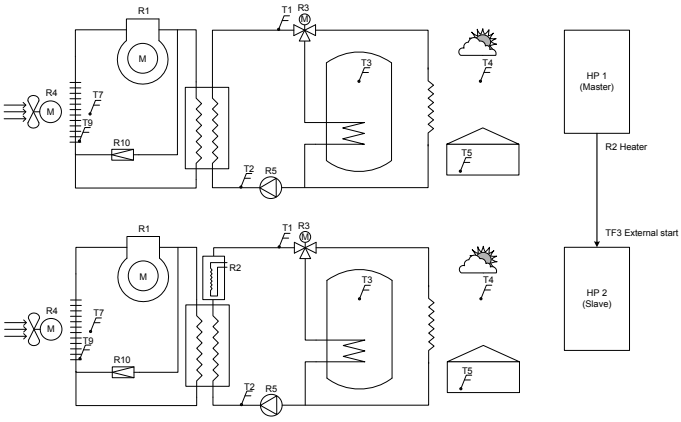

9. FAQ

Q: The controller seems to be using a different setup than expected.

A: Please check the different configuration examples in section 8. Examples of application use and verify that the menu settings are correct and the correct sensors are mounted.

Q: The controller shows an alarm on the menu.

A: Please see section 10 Alarm system and trouble shooting for alarm numbers and how to resolve the specific alarm.

Q: The compressor does not start immediately.

A:The controller calculates when to start the compressor and this is not a specific threshold but depends on the speed of change in temperature, how long ago the compressor has been running and rate of change of the temperature.

Q: Why does the electrical heat supply does not start?

A:There is an adjustable delay after compressor start before an electrical supplemental is turned on. It has also a different setpoint as for the compressor.

Q: Will the solar panel supplement the heating?

A: A solar panel is only used for how water production. The solar panel could be used for warming up the return water from the ground using a heat exchanger and setting the setpoint appropriate for the ground source temperature. The heat reject function must be considered during hot summer where the cold pump may be stopped since the heat pump is stopped.

Q: The display is only showing Initialising?

A: The communication cable between the controller and the display may be damaged. Verify that the connections are as described in section 6.2 LUP200 connections.

10. Alarm system and trouble shooting

The LMC320 controller is equipped with a failure and alarm diagnoses system. There are the alarm levels: Warning and Critical. A warning does not stop the unit but affects its temperature control precision. A critical alarm will make the unit stop, flash the alarm icon and turn off the alarm relay.

Every line consists of a number, a short fault description and a status. Up to 16 alarms at the same time can be shown.

If the status is 'A - WARNING' or "A - CRITICAL" the fault situation is still standing and can't be acknowledged until the problem is solved. A means active.

If the status is 'I WARNING' or "I CRITICAL" the fault situation is not active anymore and the fault can be acknowledged by pressing the Enter button. I means information.

On the sample below, 106 tells that Ambient temperature input has an open connection and the problem is still there since status is 'A - Warning'. It is only a warning since most of the heat pump operation is unaffected.

The alarm cannot be acknowledged before the connection has been fixed and the status has changed from A to I.

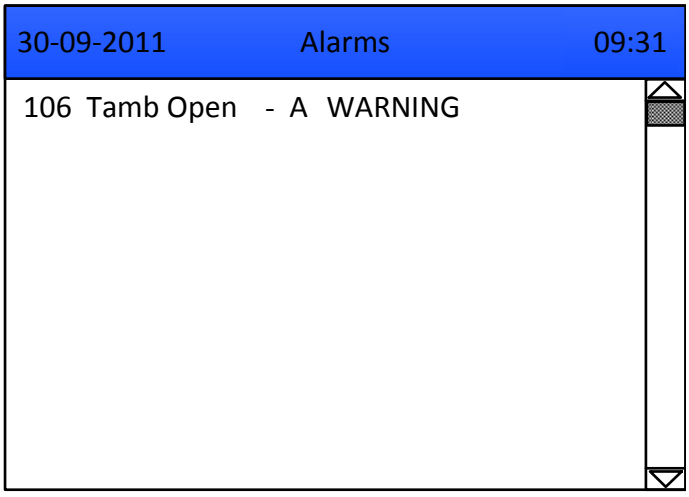

Alarm number	Type	Name	Description	Elimination
Sensors				
100	Warning	T1 Open	Heating supply temperature open connection	Check cable and connectors. Measure the resistance in the temperature sensor.
101	Warning	T1 Short	Heating supply temperature short-circuited	Check cable and connectors. Measure the resistance in the temperature sensor.
102	Warning	T2 Open	Heating return temperature open connection	Check cable and connectors. Measure the resistance in the temperature sensor.
103	Warning	T2 Short	Heating return temperature short-circuited	Check cable and connectors. Measure the resistance in the temperature sensor.
104	Warning	T3 Open	Water tank temperature open connection	Check cable and connectors. Measure the resistance in the temperature sensor.
105	Warning	T3 Short	Water tank temperature short-circuited	Check cable and connectors. Measure the resistance in the temperature sensor.
106	Warning	T4 Open	Ambient temperature open connection	Check cable and connectors. Measure the resistance in the temperature sensor.
107	Warning	T4 Short	Ambient temperature short-circuited	Check cable and connectors. Measure the resistance in the temperature sensor.
108	Warning	T5 Open	Room temperature open connection	Check cable and connectors. Measure the resistance in the temperature sensor.
109	Warning	T5 Short	Room temperature short-circuited	Check cable and connectors. Measure the resistance in the temperature sensor.
110	Warning	T6 Open	Heating tank temperature open connection	Check cable and connectors. Measure the resistance in the temperature sensor.
111	Warning	T6 Short	Heating tank temperature short-circuited	Check cable and connectors. Measure the resistance in the temperature sensor.
112	Warning	T7 Open	Cold supply temperature open connection	Check cable and connectors. Measure the resistance in the temperature sensor.
113	Warning	T7 Short	Cold supply temperature short-circuited	Check cable and connectors. Measure the resistance in the temperature sensor.
114	Warning	T8 Open	Cold return temperature open connection	Check cable and connectors. Measure the resistance in the temperature sensor.
115	Warning	T8 Short	Cold return temperature short-circuited	Check cable and connectors. Measure the resistance in the temperature sensor.
116	Warning	T9 Open	Evaporator sensor temperature open connection	Check cable and connectors. Measure the resistance in the temperature sensor.
117	Warning	T9 Short	Evaporator sensor temperature short-circuited	Check cable and connectors. Measure the resistance in the temperature sensor.
118	Warning	T10 Open	Solar water temperature open connection	Check cable and connectors. Measure the resistance in the temperature sensor.
119	Warning	T10 Short	Solar water temperature short-circuited	Check cable and connectors. Measure the resistance in the temperature sensor.
120	Warning	T11 Open	Solar panel temperature open connection	Check cable and connectors. Measure the resistance in the temperature sensor.
121	Warning	T11 Short	Solar panel temperature short-circuited	Check cable and connectors. Measure the resistance in the temperature sensor.
Hardware				
200	Critical	LOM9 missing	LOM9 missing	Check if the LOM309 is connected properly onto the LMC300.
Operation				
600	Warning	Hi Pres	High pressure switch active	Check hot side pump/overflow valve on high temperature side. Check if there is air in the hot side water. Check if the filter is blocked on the hot side. The unit restarts when the pressure drops below high pressure switch low-limit again. After 3rd cut-out the alarm must be acknowledged to start the unit again.
601	Critical	Low pres.	Low pressure switch active	Check refrigerant charge, expansion valve and evaporator for ice. Check fan for obstacles on an air to water evaporator. The alarm must be acknowledged to start the unit again.

Alarm number	Type	Name	Description	Elimination
602	Critical	Leakage	Low pressure in brine - brine pressure switch active	Leakage check of the brine system. The alarm must be acknowledged to start the unit again.
603	Critical	Hi pres	High pressure switch repeatedly active	Check hot side pump/overflow valve on high temperature side. The alarm must be acknowledged to start the unit again.
604	Warning	Frost protection	Temperature too low (state freeze protect)	Heat pump and electrical heater running full capacity. Check that setting are not turned off.
605	Warning	Heat pump overheat	Supply temperature too high (condition total stop)	Check hot side pump/overflow valve on high temperature side. Check electrical supply heater against overheating.
606	Warning	Solar panel overheat	Solar panel is in forced stop condition. (SP state Forced stop)	Check connection to external temperature adjustment.
607	Warning	Legionella failed	Anti Legionella function has timed out twice.	Check electrical heaters and supply of heat to brine circuit.
608	Warning	FC alarm	Inverter/FC fault feedback switch is active – the FC has an alarm	Check electrical connection and power to the inverter. Check if the compressor is running.
609	Critical	FC alarm	FC alarm relays has been activated repeatedly	Check electrical connection and power to the inverter. Check if the compressor is running.
Internal controller error				
904	Warning	Datalog	Error with internal log	Reserved. Not implemented yet.
905	Warning	Database	Error with internal database	Controller may be defect. Try update the firmware or replace the controller.
907	Warning	RTC err	Error with the internal real time clock	Replace the controller.
908	Warning	RTC inv	Invalid data from the real time clock	Unit powered off to long. Set time and date. Else replace the controller.
998	Warning	TestVer.	The software is a test version	Use the release version of the software.
999	Warning	Manual mode	The unit is in manual mode	Change mode from Manual to On.

11. Accessories

Lodam has the following NTC temperature sensors in stock for use with the LMC320 controller.

In the table are the suggested variant to use and an alternative sensor. Only the listed NTC temperature sensors can be used as the characteristic of the NTS element must match.

Only sensors where the selected/activated functionality requires a sensor are needed. Please check the different configurations to see which sensors are needed in section 8 Examples of application use.

433015 NTC temperature sensor, Ø6 mm * 20 mm house, cable length 5 m

433036 NTC temperature sensor, Ø6 mm * 20 mm house, cable length 2 m

433028 NTC high temperature sensor, max 240ºC, Ø6 mm * 20 mm house, cable length 0.95 m

ID	Description	NTC temperature sensor	Alternative sensor
T1	Heating supply temperature	433036 – 2 m cable	433015 – 5 m cable
T2	Heating return temperature	433036 – 2 m cable	433015 – 5 m cable
T3	Water tank temperature	433036 – 2 m cable	433015 – 5 m cable
T4	Ambient temperature	433015 – 5 m cable	433036 – 2 m cable
T5	Room temperature	433015 – 5 m cable	(433036 – 2 m cable)
T6	Heating tank temperature	433015 – 5 m cable	433036 – 2 m cable
T7	Cold side supply temperature	433036 – 2 m cable	433015 – 5 m cable
T8	Cold side return temperature	433036 – 2 m cable	433015 – 5 m cable
T9	Evaporator temperature	433036 – 2 m cable	433015 – 5 m cable
T10	Solar water temperature	433036 – 2 m cable	433015 – 5 m cable
T11	Solar panel temperature	433028 – 0.95 m cable	–

Accuracy with the used temperature sensors:
Typical +/-1ºC in the range -30ºC to +90ºC; +/-0.5ºC in the range 0ºC to 50ºC.

12. Ambient compensation curves

The user can choose between 10 predefined curves and also adjust a user specific curve. A curve is used to calculate the reference setpoint for the return water temperature. Interpolation is used between the temperatures.

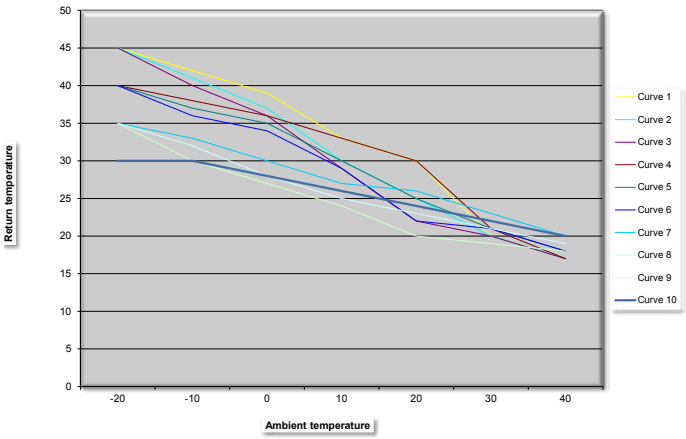

A poor insulation level means a higher impact of the ambient temperature on the room temperature and requires a higher calculated return water temperature.

The flat curves are for floor heating systems. Curve 0 is reserved for a user defined curve. Curve 9 is the one with the least adjustment and is for the best insulated house.

The curve can be selected and adjusted in the Installer – Heating settings – Room / Amb compensation menu.

The ambient compensation is only active if Temp control Mode is Ambient, Room or Amb+Room.

The calculated reference setpoint can be offset adjusted with User - Ambient curve offset.

13. NTC temperature/ resistance table

Table with relation between temperature and measured resistance in the NTC sensor. Resistance is in Ohm and temperature in ºC.

The four right-most columns are at temperatures 2, 4, 6 and 8ºC higher than the temperature in the left-most column.

The listed resistance is what should be measured with a multi meter on the two wires to the sensor when it is dismounted and has a stable temperature.

Temp. [ºC]	Temp. [Ohm]	Temp.+ 2K [Ohm]	Temp.+ 4K [Ohm]	Temp.+ 6K [Ohm]	Temp.+ 8K [Ohm]
-60	139.7935 Ω	1200732 Ω	103.3619 Ω	891.689 Ω	77.0880 Ω
-50	667.828 Ω	579.718 Ω	504.230 Ω	439.445 Ω	383.712 Ω
-40	335.671 Ω	294.193 Ω	258.307 Ω	227.196 Ω	200.184 Ω
-30	176.683 Ω	156.199 Ω	138.322 Ω	122.687 Ω	108.991 Ω
-20	96.974 Ω	86.415 Ω	77.121 Ω	68.927 Ω	61.693 Ω
-10	55.298 Ω	49.663 Ω	44.610 Ω	40.150 Ω	36.183 Ω
0	32.651 Ω	29.500 Ω	26.688 Ω	24.173 Ω	21.922 Ω
10	19.904 Ω	18.093 Ω	16.465 Ω	15.001 Ω	13.683 Ω
20	12.494 Ω	11.420 Ω	10.450 Ω	9.572 Ω	8.777 Ω
30	8.056 Ω	7.402 Ω	6.807 Ω	6.266 Ω	5.774 Ω
40	5.325 Ω	4.916 Ω	4.542 Ω	4.200 Ω	3.887 Ω
50	3.601 Ω	3.339 Ω	3.098 Ω	2.877 Ω	2.674 Ω
60	2.487 Ω	2.315 Ω	2.157 Ω	2.011 Ω	1.876 Ω
70	1.752 Ω	1.637 Ω	1.530 Ω	1.432 Ω	1.341 Ω
80	1.256 Ω	1.178 Ω	1.105 Ω	1.037 Ω	975 Ω
90	916 Ω	862 Ω	811 Ω	768 Ω	720 Ω
100	679 Ω	640 Ω	604 Ω	571 Ω	540 Ω
110	510 Ω	483 Ω	457 Ω	433 Ω	401 Ω
120	389 Ω	369 Ω	350 Ω	332 Ω	315 Ω

14. Index

A
Accessories 21
Alarm system 18
Ambient compensation curves 22

C
Connections 9

D
Definitions 5

E
Examples of application use 12

L
LMC320 6
LUP200 6

M
Main menu 11
Menu system 11
Mounting 6

N
NTC temperature/resistance table 23

P
Password menu 11

T
Technical data 7
Trouble shooting 18

15. Notes

IP address of the LMC320 ___.___.___.___

IP address of the computer ___.___.___.___

IP address of the router ___.___.___.___

External IP address ___.___.___.___

Web address _____

Port number range _____ to _____

Innovative and energy saving **climate control**

When it comes to climate control Lodam is one of the most experienced you can turn to. For more than four decades we have developed, produced and implemented electronic solutions dedicated to optimising applications like:

- Compressors
- Condensing units
- Heat pumps
- Air conditioning
- Refrigerated truck and trailer
- Reefer containers

We know the importance of reliable, energy-efficient operation – and constantly push technological boundaries to bring you the most innovative and forward-thinking solutions.

As part of the BITZER Group we are backed by one of the world's leading players in the refrigeration and air conditioning industry. This alliance provides us with extensive network and application knowhow and allows us to stay at the forefront of climate control innovation. And to help ensure comfortable surroundings for humans and reliable protection of valuable goods anywhere in the world.

29-01-2015 Contents are subject to change without notice.

For more information visit:

www.lodam.com

Lodam electronics a/s
Kærvej 77
6400 Sønderborg
Denmark

Tel. +45 7342 3737
Fax +45 7342 3730
lodam@lodam.com